سایت اختصاصی

مهندسی کنترل

https://controlengineers.ir

https://t.me/controlengineers

https://www.instagram.com/controlengineers.ir

Proceedings of the 26th Chinese Control Conference
July 26-31, 2007, Zhangjiajie, Hunan, China

On Remote Real-time Communication between MATLAB and PLC Based on OPC Technology*

Zhang Lieping [1,2], Zeng Aiqun [2], Zhang Yunsheng[1]

1. School of Information Engineering and Automation, Kunming University of Science and Technology, Kunming 650093, P. R. China
E-mail: zlp@glite.edu.cn
2. Department of Electronic and Computer, Guilin University of Technology, Guilin 541004, P. R. China
E-mail: zaq8106@163.com

Abstract: Aiming at the communication between MATLAB and PLC, the paper presents a method of implementing remote real-time communication based on OPC (OLE for Process Control) on the Ethernet. It analyzed the principle of remote real-time communication between MATLAB and PLC and designed a remote real-time communication test system consisting of MATLAB, Ethernet and S7-300 PLC. The author realized the S7-300 PLC hardware configuration, OPC server configuration, configuration variable and real-time data exchange between MATLAB and S7-300 PLC by using MATLAB OPC toolbox, and gave out the details of procedure and program. The test results indicate that the function of exchanging remote real-time data can be attained between MATLAB and S7-300 PLC through OPC server, and prove that it is an effective and feasible method to realize the real-time remote communication between MATLAB and PLC. The proposed method can be used to realize data process and advanced control in industrial to improve the quality of control.

Key Words: OPC, MATLAB, PLC, Configuration, Remote Real-time Communication

1 INTRODUCTION

OPC technology is a hardware and software interface standard using Client/Server mode based on COM (Component Object Model)/DCOM (Distributed Component Object Model), which offers a general standard mechanism for client's and server's data communication and exchange and supports the network distributional application procedure communication as well as the application procedure communication in different platforms[1,2]. So OPC technology makes it easy for software and hardware from different producers to integrate and offers an effective solution for remote real-time communication between PC and process devices[3]. MATLAB which is promoted by MathWorks Corporation has a formidable value computation and graph plan function. It can provide some formidable and various toolboxes in many domains[4]. We can use OPC toolbox to gain conveniently the exterior real-time data and realize the remote real-time communication between MATLAB and process devices. In this paper, a concrete scheme is available for remote real-time communication between MATLAB and SIEMENS S7-300 products based on OPC technology.

2 COMMUNICATION PRINCIPLE

OPC standard offers two kinds of industry standardization interfaces in COM module: OPC custom interface and OPC automation interface. Through the OPC interfaces, the connection of "plug and play" is formed between OPC clients and OPC server. A standard interface is provided to OPC objects by OPC Server component, at the same time, OPC objects are managed by the interface. The client creates and manages the server using API provided by COM, and accesses the server's data objects through the interface method. OPC server described by OPC norm is made up of three levels of objects, which are the server object, the group object and the item object. An OPC server includes an OPC server object which has all information of the server, also the OPC server object includes group object and the group object has all information of the group object and the item object. OPC object hierarchy structure is shown as Fig. 1.

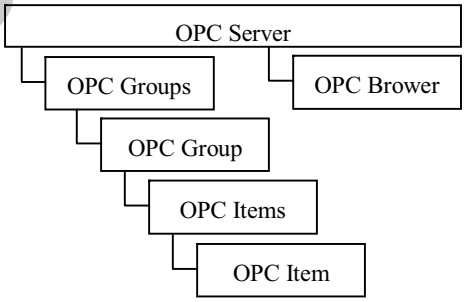

Fig.1 OPC structure object hierarchy

MATLAB 7.0 and its above editions integrate the OPC Toolbox which is a function module to expand the MATLAB numerical calculations environment. It realizes the object-oriented hierarchy and OPC server communication method by using OPC data access standard, and provides a method to read or write OPC data through visiting the OPC server directly in the MATLAB environment. By utilizing the OPC Toolbox, we can create the OPC customer application programming easily to realize the communication between MATLAB and OPC server and realize fast raw data analysis, measure and control, even though we don't know the internal configuration of the OPC server.

Data access relationship between customer's MATLAB application programming and process devices is shown as Fig. 2. Customer's MATLAB application programming visits the process devices data through OPC interfaces, and exchanges data with OPC server object in-

* This work is supported by Guangxi Province Nature Science Foundation under Grant 0575101 and Department of Education of Guangxi Province Nature Science Foundation under Grant 2006.

stead of visiting OPC server directly. The OPC group object provides a way of customer's organizing data. The OPC item object is an object defined by OPC server, which is the least logic unit for reading or writing data. It can provide a connection between OPC server and process data source, that is to say, each item object connects with a signal variable of process devices. The OPC item object provides the value, attribute, timestamp and data type of the signal variable to OPC customer, which usually points to a register of process devices. All the equipment register operations of the OPC customer are accomplished by its item object. Because the OPC item object is not a COM object and can't provide the interfaces to customer, the customer can not operate the item object directly and the access to the OPC item object should be accomplished through group object. There are three data exchange methods between OPC customer's application programming and OPC server: the synchronous way, the asynchronous way and the subscription way. The synchronous way is comparatively simple and often used when the exchange data amount is less. The asynchronous way is comparatively complicated and it can communicate with physical devices directly. The efficiency of the asynchronous way is higher when there are a large number of customers and exchange data. By using the subscription way, the OPC server will notice the OPC customer automatically when the data changes. The paper used the asynchronous way to realize the data communication between OPC customer and OPC server.

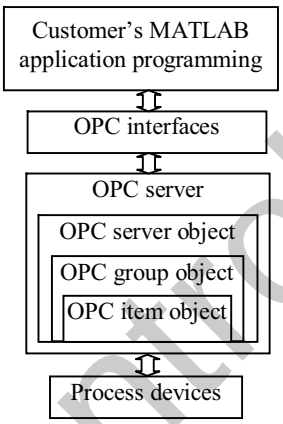

Fig.2 Data access relationship between MATLAB application programming and process devices

3 COMPOSITION OF TEST SYSTEM

The composition of the remote real-time communication test system between MATLAB and PLC is shown as Fig.3. The systematic basic hardware items are shown as following: A PC (Personal Computer) furnished with an ordinary network card; A SIMATIC S7-300 CPU315-2DP; A SIMATIC CP343-1 communication card (This card is supported by some protocols, such as ISO, TCP/IP and UDP, etc. The CP343-1 card offers the RJ45 interface which is used for connecting with industry Ethernet, and through its own microprocessor. It can deal with the data communication of industry Ethernet independently, and has an only IP address preserved, also it can be put into operation directly through the network); A SM321 DI 16*DC 24V digital input module; A SM322 DO 16*DC 24V/0.5A digital output module; An SM331 AI 8*12BIT analog input module; An SM332 AO 4*12BIT analog output module; In addition, A PC-Adapter which is used to convert PC's RS232 interface to PLC MPI/DP interface is furnished. The step7 systematic configuration and procedure can be downloaded to PLC with the PC-Adapter. The process devices are a water tank process control devices of CREATE Company.

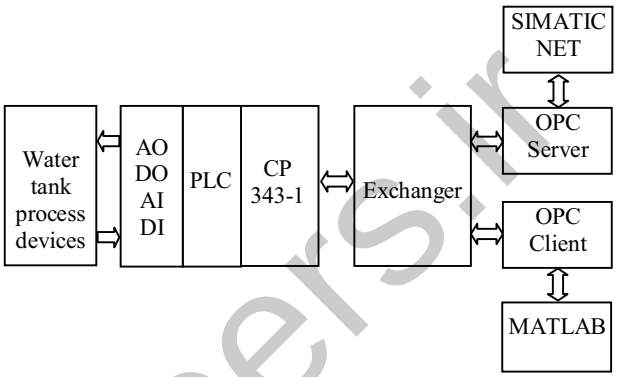

Fig.3 The composition of the remote real-time communication test system between MATLAB and PLC

The systematic basic software items are shown as following: Windows 2000 Professional (The SIMATIC NET OPC Server is a 32 bit application program, which can only run in Windows NT 4.0 or its upgraded operating systems); The SIMATIC NET software (It is installed in the PC server to configure the communication and to set OPC Server), Step7 V5.1 (It is used to program PLC); MATLAB 7.0.1(It is installed to program client PC).

MATLAB connects OPC server through OPC interfaces and accesses the data of S7-300 PLC devices register units by accessing item object in OPC server. Because the group object provides the interfaces to S7-300, the S7-300 PLC exchange data with group object but not item object. The interfaces use the TCP/IP communication protocol of CP343-1 to realize. The OPC interfaces can connect OPC server after configuring the OPC server object, the group object and the item object using OPC scout. When the OPC interfaces are opened, the OPC customer's application programming will access the OPC server and realize the access to S7-300 PLC.

4 COMMUNICATION REALIZATION

4.1 Configuration Connection

The purpose of configuration connection is to set up connection between the OPC server and the customer, and it includes two following respects specifically.

(1) Hardware Configuration and Programming

There are two purposes of S7-300 PLC hardware system configuration. One is to set communication basic parameters and the program addresses between PLC and PC, which are used by OPC Server, the other is to open the memory section and data section which the PC need

to access and download the basic data and program to PLC. First, run 'SIMATIC STEP/ SIMATIC Manager' application program, then complete PLC hardware configuration of CPU315-2DP, CP343-1DI/DO modules, AI/AO modules, OPC Server and setting of the basic parameters of system. Second, choose the communication port by the setting the PG-PC Interface of SIMATIC NET, in which users choose the communication device, set the PC-Adapter communication speed, MPI address, the COM port address and communication speed between PC-Adapter and PC. In the end, download the hardware configuration and PLC program to the CPU of PLC.

(2) OPC Server Configuration

Configuration should be finished in the COM before starting the OPC Server. First, choose the network communication device and set its relational parameters by utilizing 'Setting the PG-PC Interface' application in SIMATIC NET. Secondly, run COMLS7 application in SIMATIC NET, and set COML S7 configuration parameter and save as a file. Thirdly, return to Setting the PG-PC Interface, and set SAPI S7 data of communication card. In the end, enter the OPC parameter setting surface of SIMATIC NET OPC Server by OPC SERVER/OPC Settings of SIMATIC NET, set communication requiring cycle, and select S7 CONNECTION as communication protocol between PC and PLC. Here S7ONLINE is selected as communication channel.

4.2 Configuration Variable

The purpose of configuration variable is to set up the communication data variable between the OPC server and S7-300 PLC. OPC scout is an OPC monitor program in the OPC Server of SIMATIC NET. OPC Scout can define an OPC connection group and variables of DB section, Memory(Abbreviate as M) section corresponding to PLC. Build a new OPC connection group if 'OPC.SimaticNET' is double clicked in the 'OPC Navigator' interface, after that an ITEM can be added in the 'OPC Navigator' surface. Double click the 'Connection' and open the link, then PLC M section, DB section and Q section will be found. Double click M section (or DB section) in which data variables corresponding to PLC special address will be built according to the dialog box. Two data variables built in M section have been given in Tab. 1.

Tab.1 Data Variable Built in PLC

Data Type	Address	Remarks
REAL	52	Water tank pressure
REAL	60	High pressure setting value

4.3 Communication Program

MATLAB OPC toolbox has offered two ways to set up connection between OPC customer end and OPC server[5]. One is the command way, and the other is the GUI way. We can realize the remote real-time communication between MATLAB and process devices through one of the two ways. Before we design the remote real-time communication program between MATALB and process devices, the two following things should be finished.

① The OPC Foundation offers a set of core components to browse other computers and communicate with them which do not be installed. Before we use the OPC toolbox, we can use 'OPC register ('install')' to install them.

② In order to set up connection between object in OPC toolbox and OPC server object, we should configure the distributed COM environment between OPC server and OPC customer.

We can program with MATLAB to access the remote real-time PLC data after finishing these relevant preparations. The flow diagram with MATLAB as client to access the data of S7-300 PLC is shown as Fig. 4.

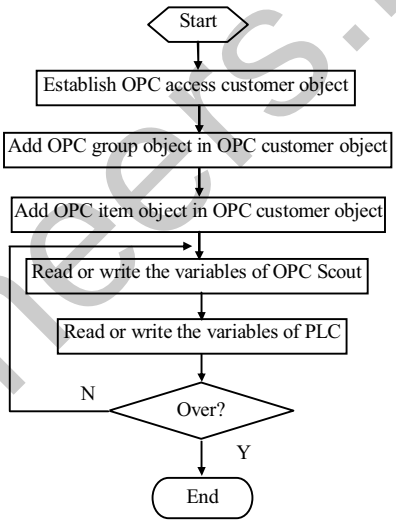

Fig.4 The real-time communication flow diagram between MATLAB and PLC based on OPC

According to the communication flow diagram in Figure 4, we can program OPC application in Client with MATLAB command. A main example program for remote real-time communication between MATLAB and S7-300 PLC is as following.

```
clear
myda = opcda('192.168.0.1','OPC.SimaticNET');
connect(myda);
grp = addgroup(myda,'mygrp');
itm1 =
additem(grp,'S7:[S7_opc|VFD1|S7ONLINE]MREAL52');
set(grp,'UpdateRate',0.2);
set(grp,'RecordsToAcquire',40);
set(grp,'RecordsAcquiredFcnCount',2);
set(grp,'RecordsAcquiredFcn',@displayfunction);
start(grp);
wait(grp);
…
myda = opcda('192.168.0.1','OPC.SimaticNET');
connect(myda);
grp = addgroup(myda,' mygrp ');
itm2 = additem(grp,'S7:[S7_opc| VFD1|S7ONLINE]
MREAL60');
writeasync(itm2,0.5);
…
```

```
disconnect(myda)
delete(myda)
clear myda grp itm1 itm2
```

We can get a historical trend map of water tank pressure online (shown as Fig. 5) when the MATLAB program is running. The value in the MATLAB figure alters with the press value of water tank. After we set the high pressure setting value of water tank to 0.5, we will find the value of REAL 60 in OPC scout having changed to o.5. The valve of remote water tank is opened and the water in the water tank is declining at the same time, and the change of the press value will stop until the actual value of water tank declines to o.5. Thus the remote real-time communication between MATLAB and S7-300 PLC can be realized.

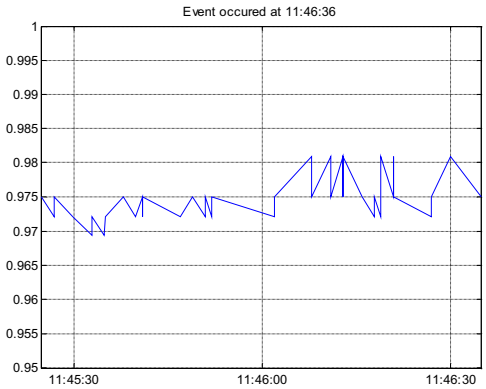

Fig.5 The historical trend map of water tank pressure

5 CONCLUSION

MATLAB OPC Toolbox offers abundant OPC tool functions, which make the user can simply and conveniently realize the operation to the OPC objects. They can simplify the process of development and provide an effective method to realize the remote real-time communication between MATLAB and process devices. The method about remote real-time communication between MATLAB and process devices has its representativeness and has a high value to the study and exploitation of real-time system. Moreover, MATLAB offers abundant control functions and provides abundant advanced control algorithms. On the basis of this paper, we can realize advanced control of complicated industrial process based on network environment to improve control efficiency.

REFERENCES

[1] OPC Foundation. OPC Data Access Custom Interface Standard Version 2.05[EB/OL](2001-12). http://www.opcfoundation .org.
[2] OPC Foundation. OPC Data Access Automation Interface Standard Version 2.02[EB/OL] 1999-02. http://www. opcfoundation .org.
[3] Xu Hong, Wang Jianhua, Using standard components in automation industry: A study on OPC Specification[J]. Computer Standards & Interfaces, 2006, 28, 386–395.
[4] Sun Xiang, MATLAB 7.0 Basic Tutorial[M]. Beijing, China, Tsinghua University Press, 2005.
[5] The Math Works Inc. OPC Toolbox For Use with MATLAB[P/OL]. 2004-10, http://www.mathworks. com/access / helpdesk/help/pdf_doc/opc/opc.pdf.